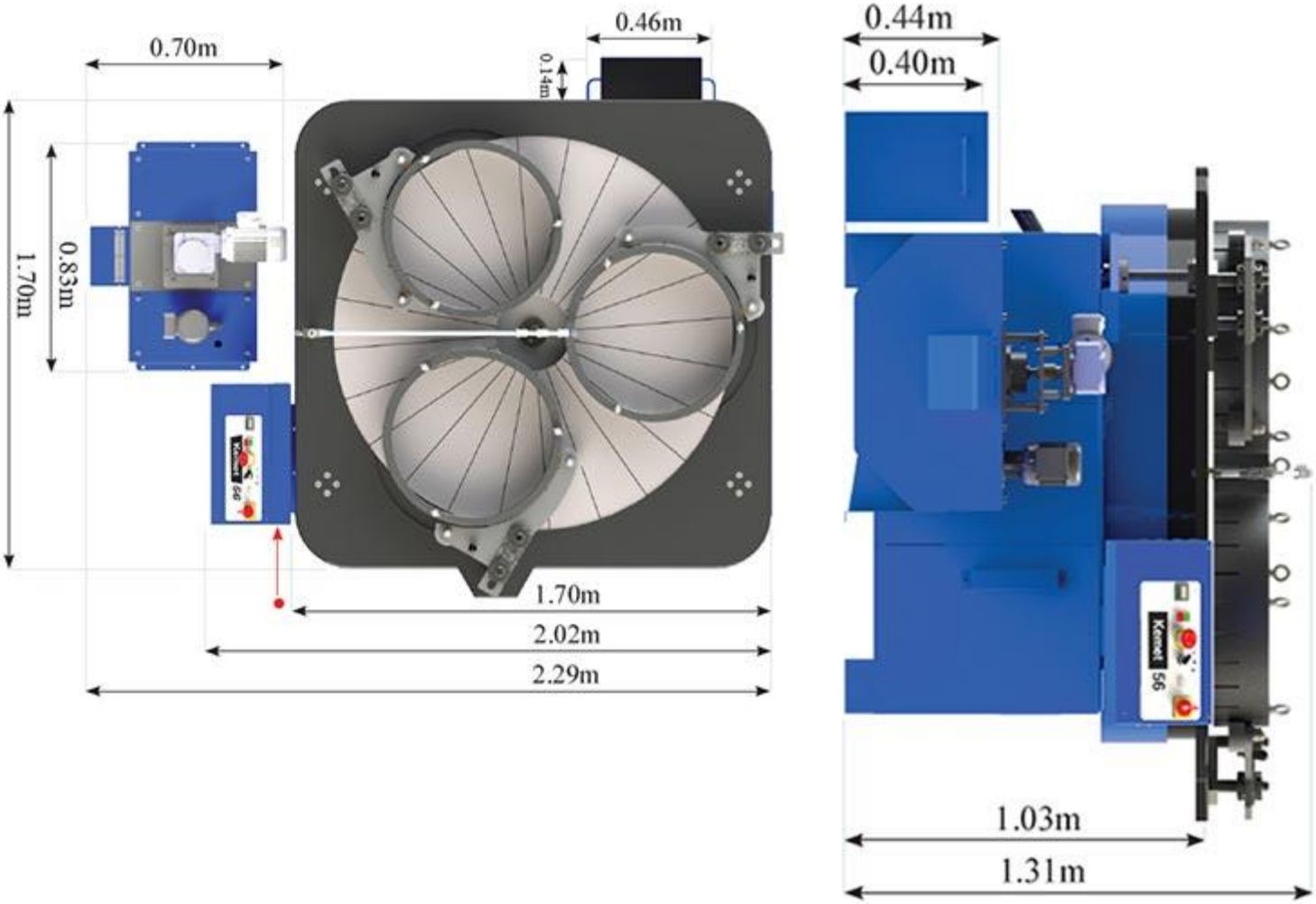
0.44m
0.40m
1.03m
1.31m
0.46m
0.14m
0.70m
1.70m
0.83m
1.70m
2.02m
2.29m